Distributor Possible scenarios

Last updated by | m.calderon.santiago@accenture.com | 23 abr 2026 at 13:46 CEST

Contents

- Distributor Possible Scenarios
  - Scenario 1: New Distributor Prospect
  - Scenario 2: New Confirmed Distributor from SAP

Distributor Possible Scenarios

To illustrate the practical application of the distributor prospect qualification process, we have identified the next possible scenarios:

1. **Scenario 1: New Distributor Prospect –** Occurs when there is a requirement to register a new record of the "Distributor Prospect" type within the system.
2. **Scenario 2: New Confirmed Distributor from SAP –** This occurs when the distributor is generated directly in SAP.

Scenario 1: New Distributor Prospect

To register a new Distributor Prospect record in the system (given that both **Customer** and **Distributor** Account records originate from SAP and cannot be generated directly in Salesforce) the process will begin with the creation of a new record in the **Lead** object. All minimum required information must be captured at this stage to successfully generate a Prospect-type record:

- Name
- Address
- Account Type (Dealer Simple -> 0002)
- Language
- Telephone
- Email
- Currency
- Sales Org (by default)
- Sales District

This information will remain in the **Lead** object until a sales user confirms that the distributor can be qualified. At that moment, Salesforce will automatically generate a **Prospect Account** (with the Type value set to Distributor) based on the lead information. During this process, Salesforce performs a duplicate check to ensure neither the Account already exists.

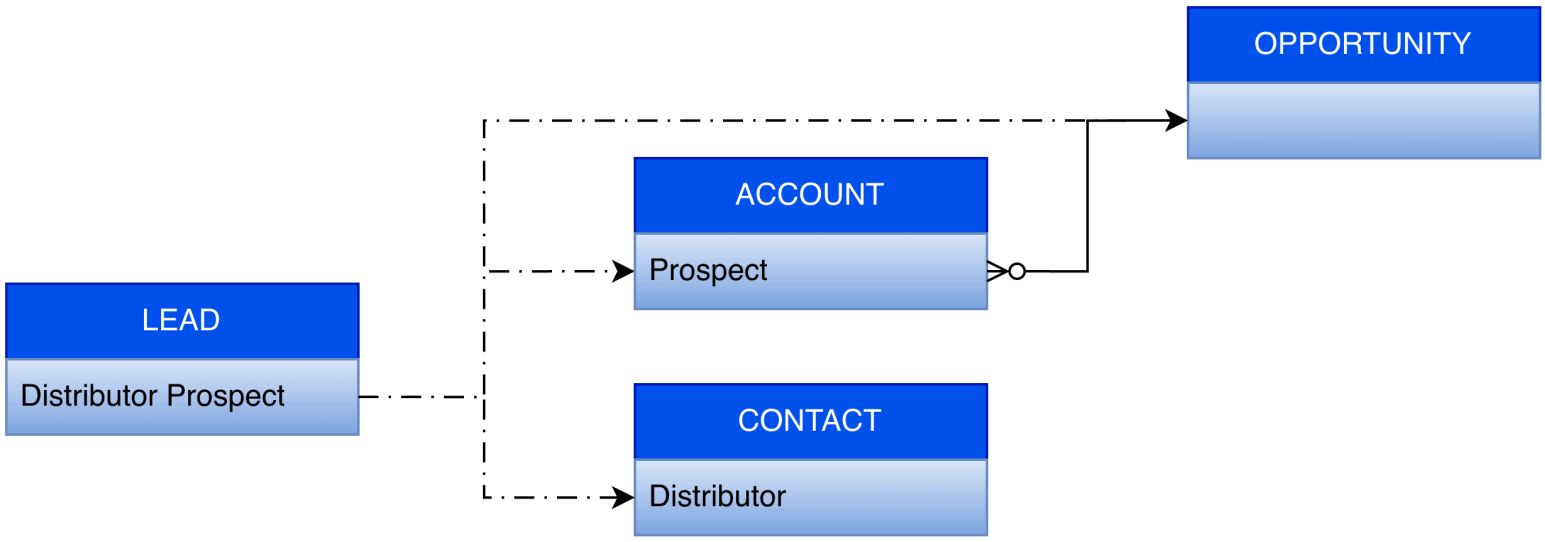

It's important to note that when qualifying a lead in Salesforce, we can also automatically generate an opportunity associated with the new prospect account created during qualification. Opportunities associated with a prospect account cannot progress through the defined workflow until they have been validated in SAP. Similarly, if we generate an opportunity for a customer and indicate that the distributor is a record that has not yet been validated, it will also be impossible to advance in the defined workflow.

Since a preliminary validation has already been performed to generate the new **Prospect Account** record, we can now automatically generate the validation request for SAP. Along with the creation of the Prospect Account, the necessary records will be generated in the **Data Change Request** and **Data Change Request Field** objects to consolidate all required information for transmission to SAP.

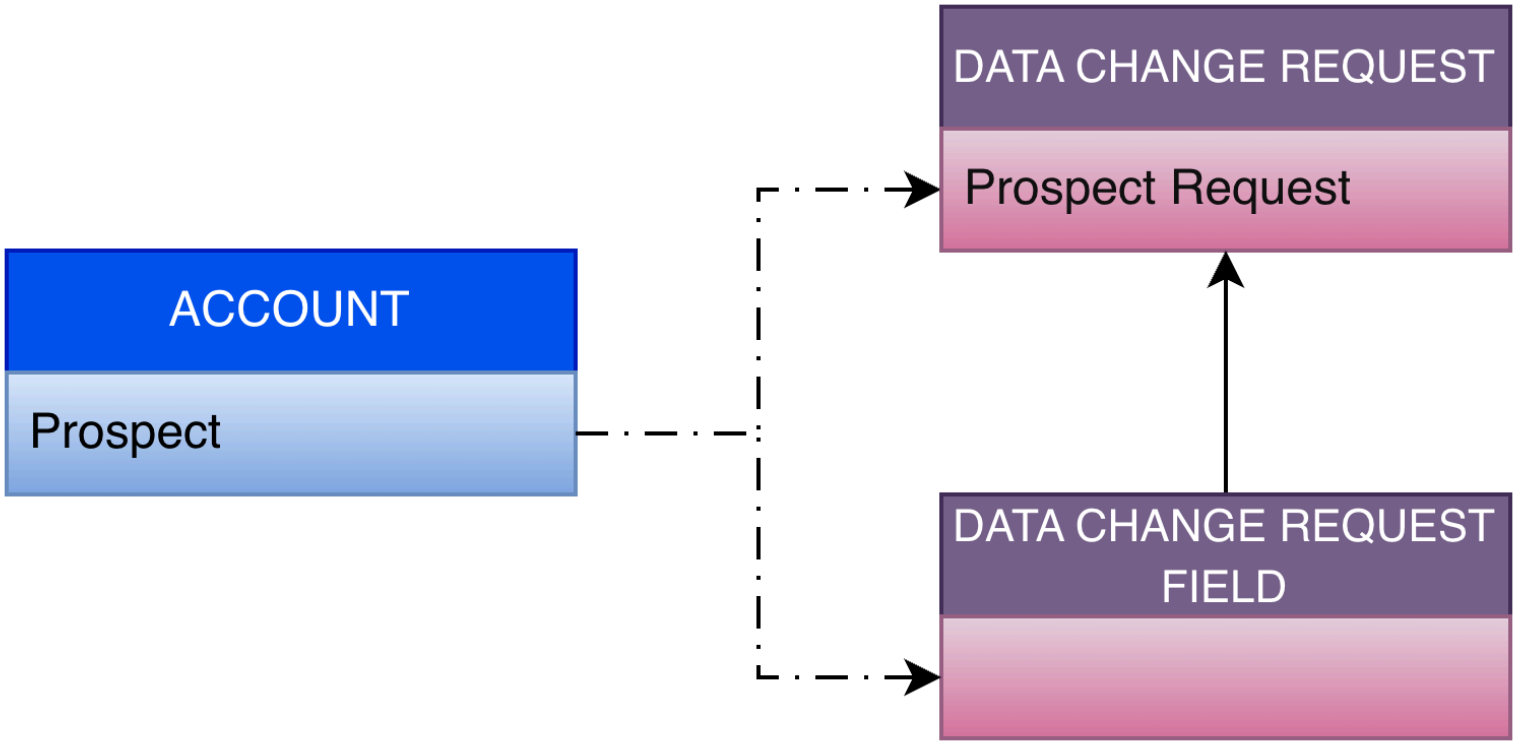

Sending a validation form for a distributor-type prospect is the same as sending one for a customer-type prospect. The only difference is that the required information is sent for each type of registration.

However, once a Prospect record has been submitted to SAP, its modification could be restricted. Similarly, once SAP validates the record, its status changes from Prospect to Distributor, at which point it can no longer be modified directly within Salesforce.

All distributor-customer relationships will be generated in SAP and sent to the Salesforce "Account Relationship" object to be displayed in the system.

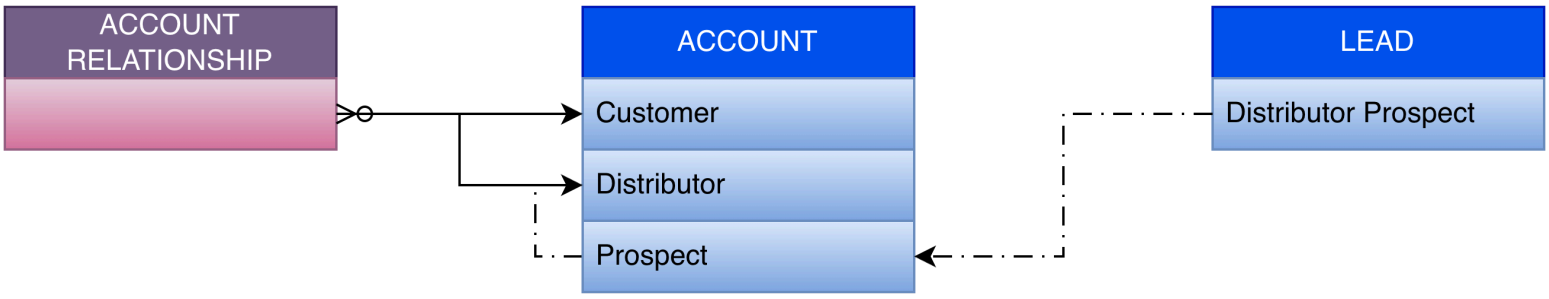

Scenario 2: New Confirmed Distributor from SAP

If the records are generated in the master system "SAP", no action is required from Salesforce.

Salesforce will receive both the Account records of type Distributor and the relationships with the various customers of these distributors.

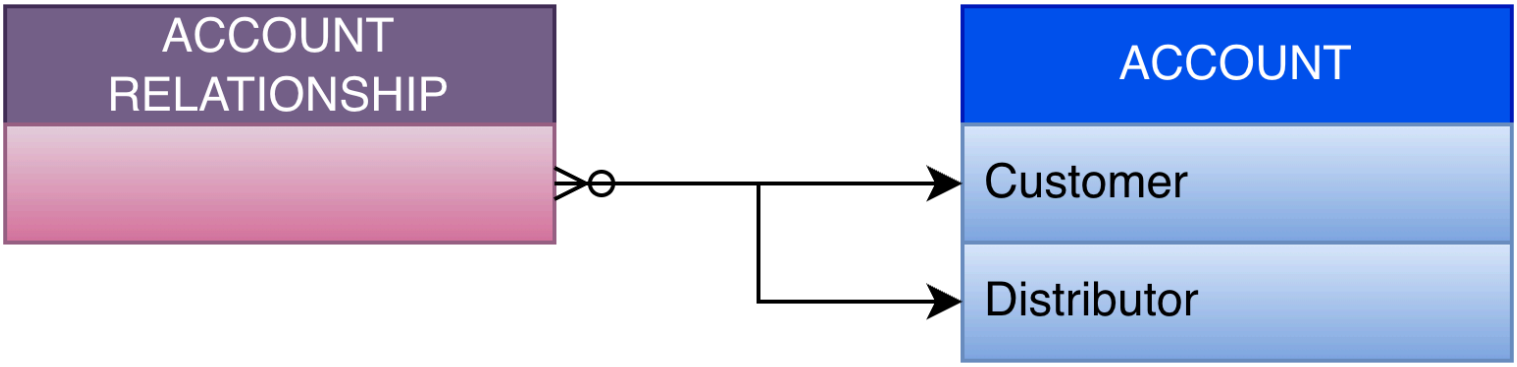
ACCOUNT RELATIONSHIP
ACCOUNT
Customer
Distributor